NovoPort® IV

903012-03-6-50 09/2018

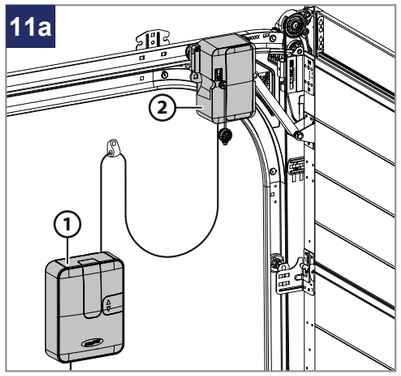

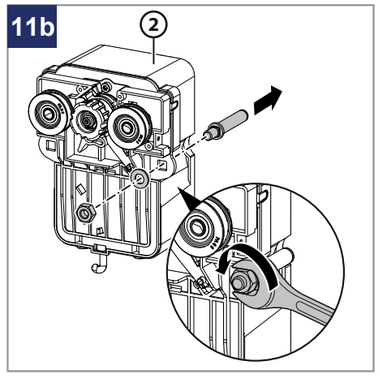

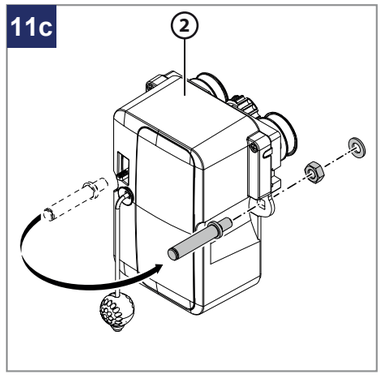

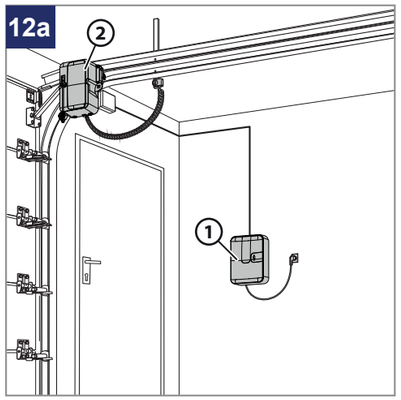

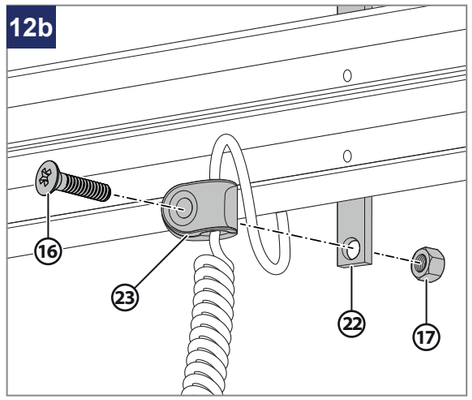

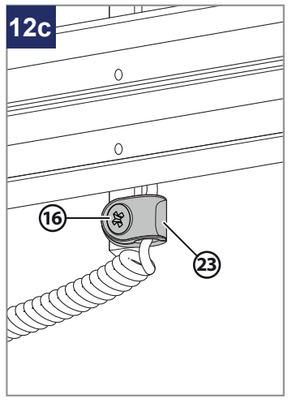

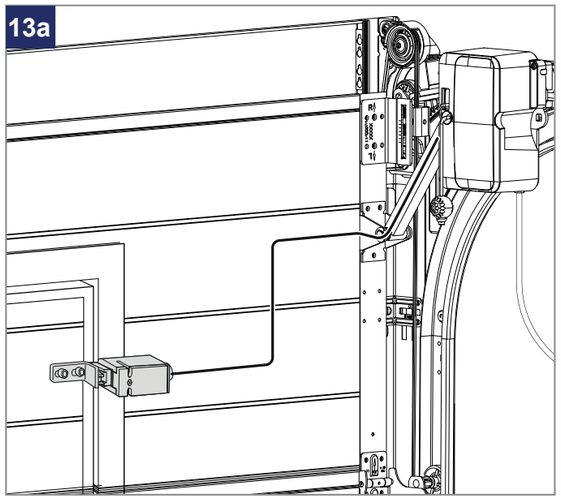

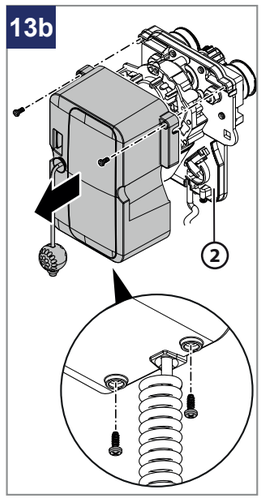

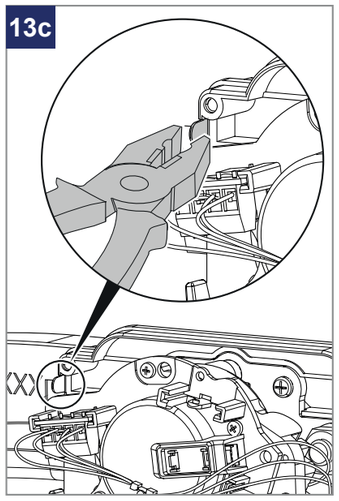

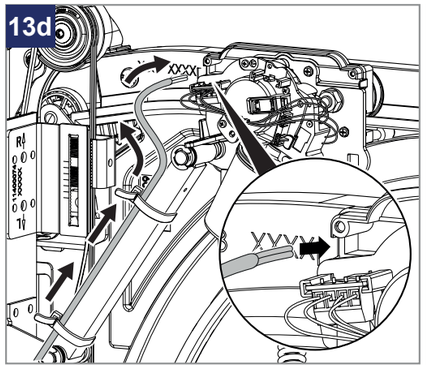

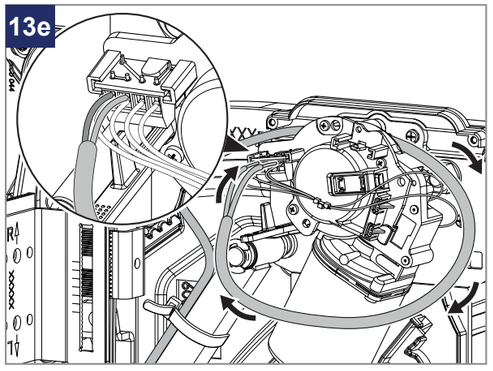

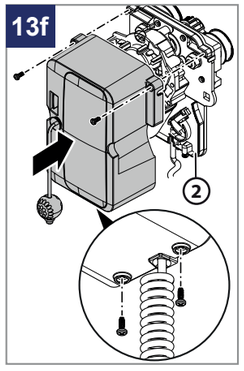

PARTS

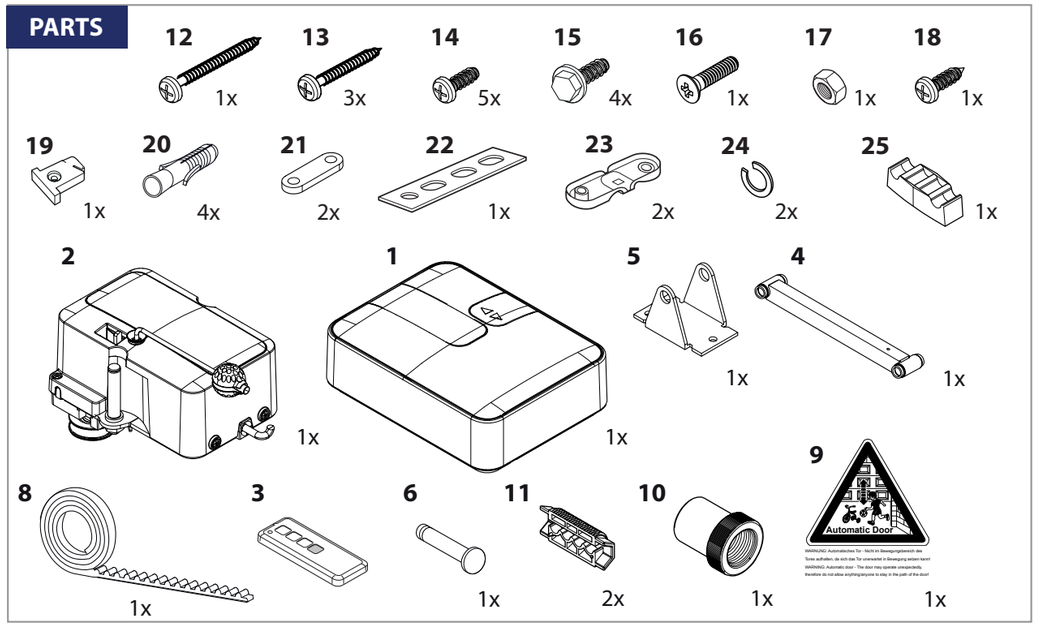

TOOLS

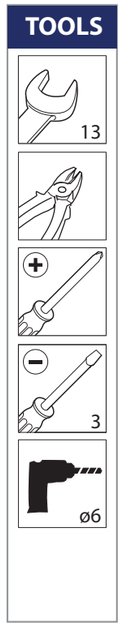

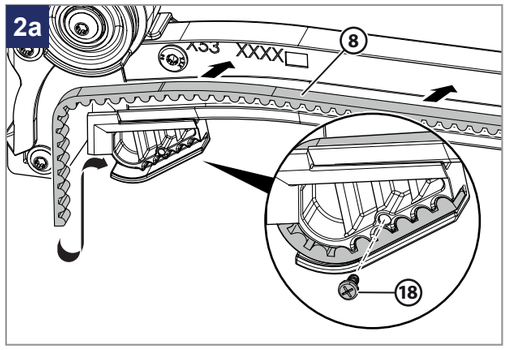

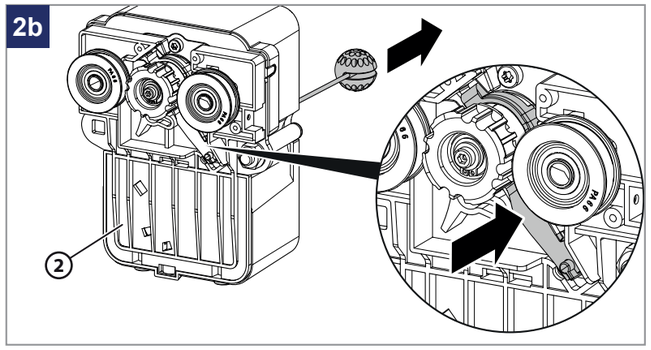

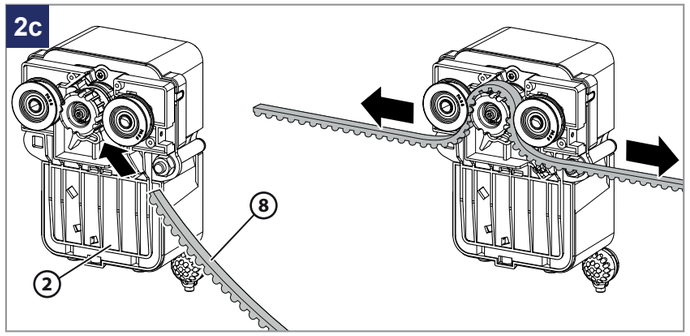

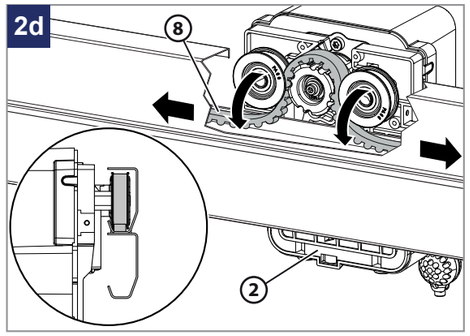

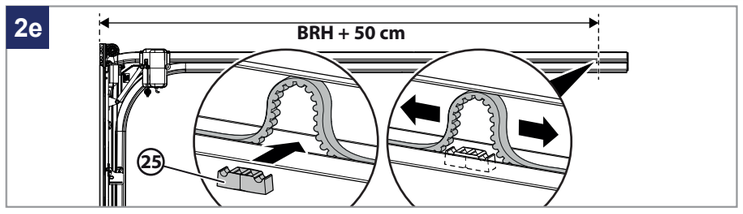

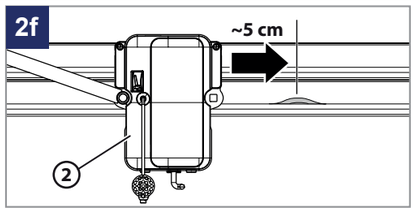

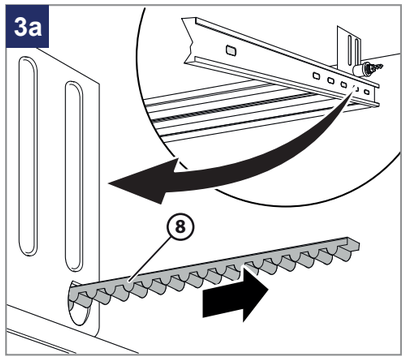
3a
8
8

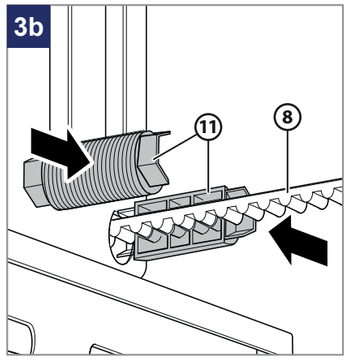
3b
11
8

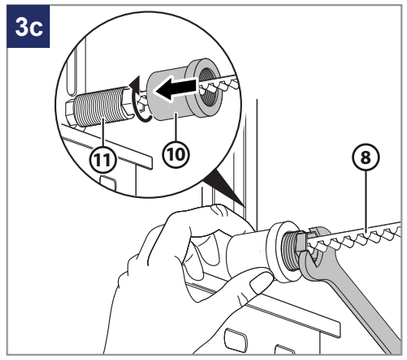
3c
11
10
8

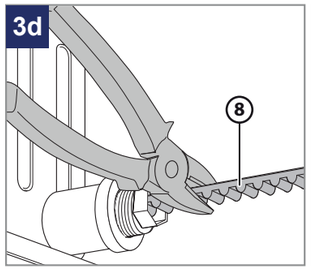
3d
8

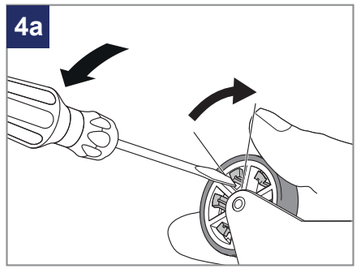
4a

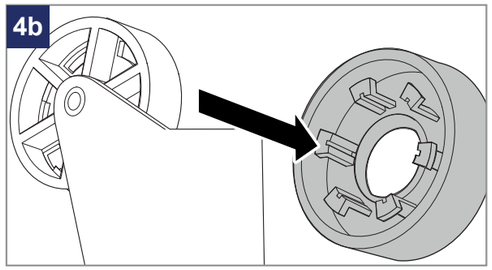
4b

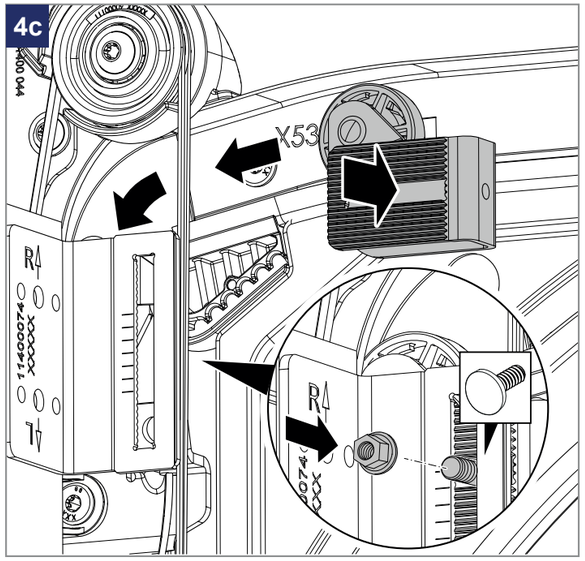
4c
X53

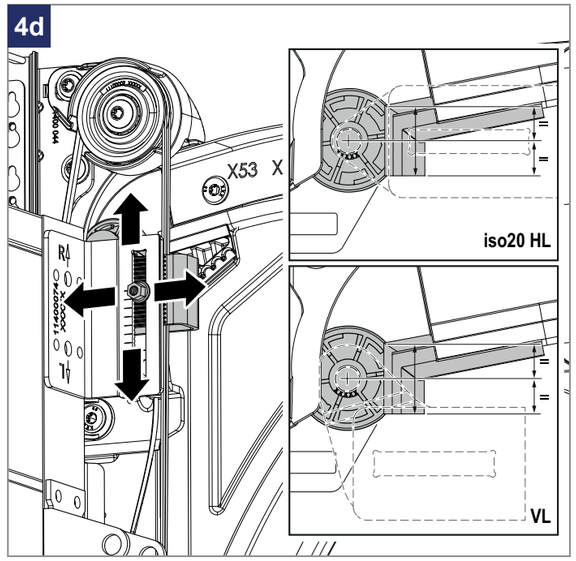
4d
X53
iso20 HL
VL

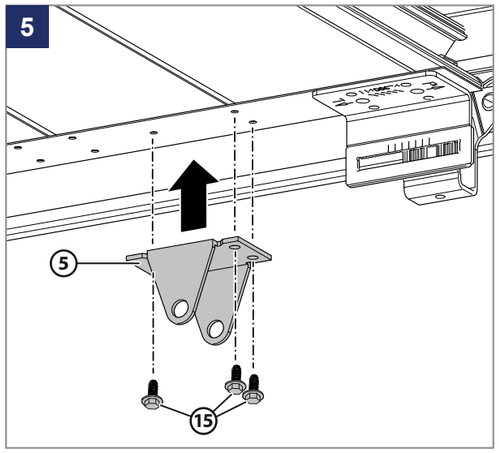
5
5
15

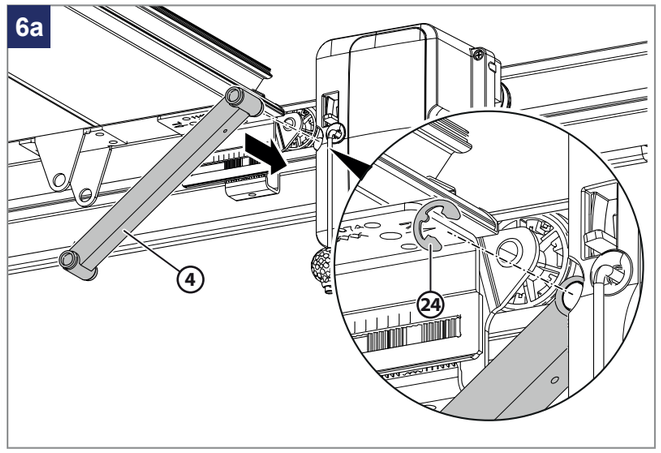
6a
4
24

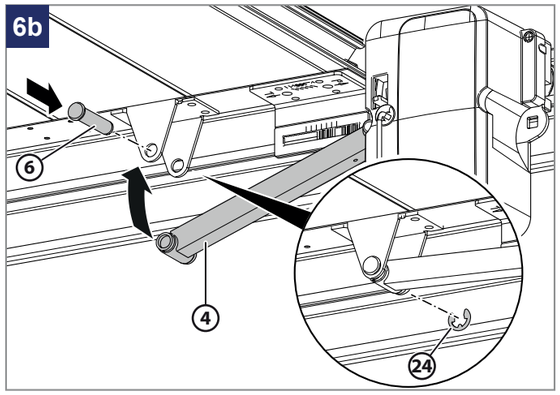
6b
6
4
24

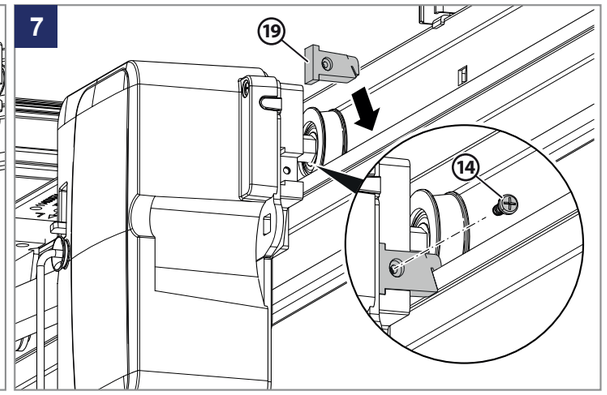
7
19
14

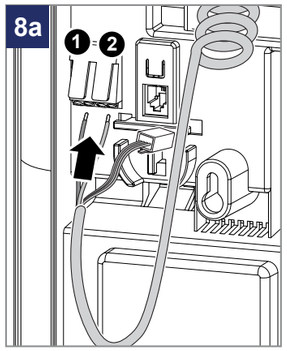
8a
1
2

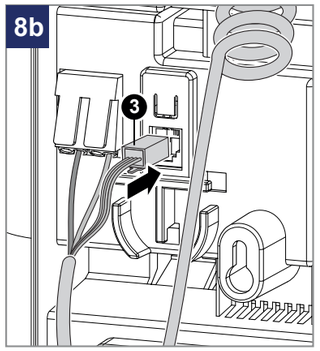
8b
3

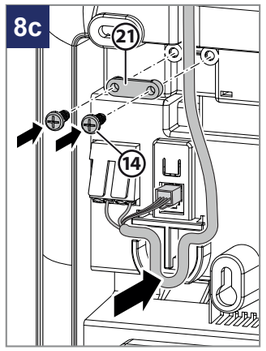
8c
21
14

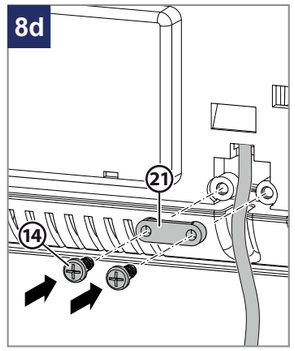
8d
21
14

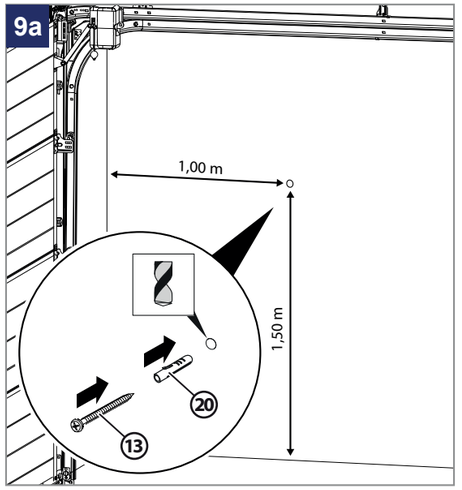
9a
1,00 m
1,50 m
13
20

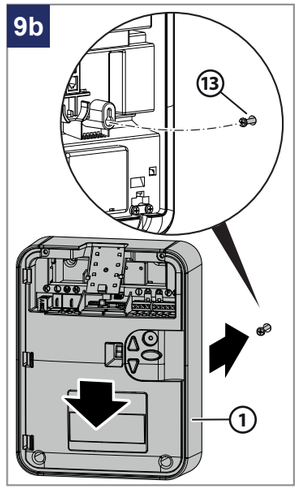
9b
13
1

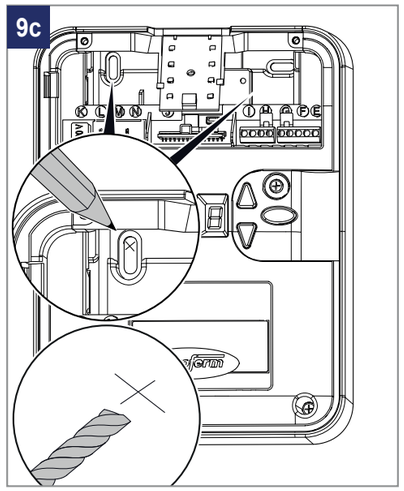
9c

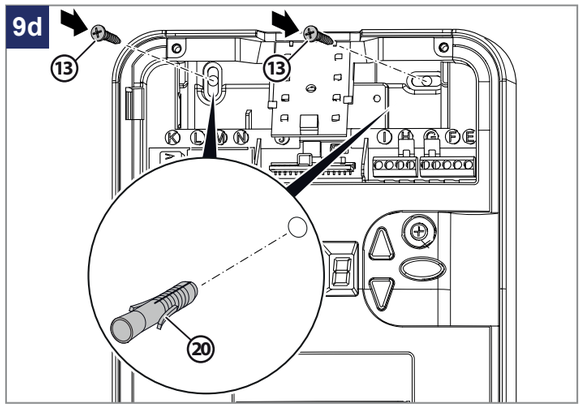
9d
13
13
20

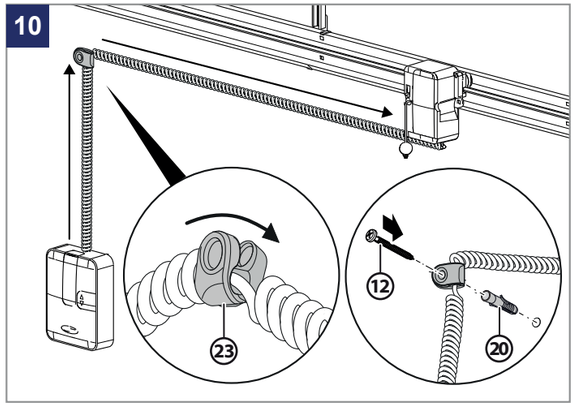
10
23
12
20